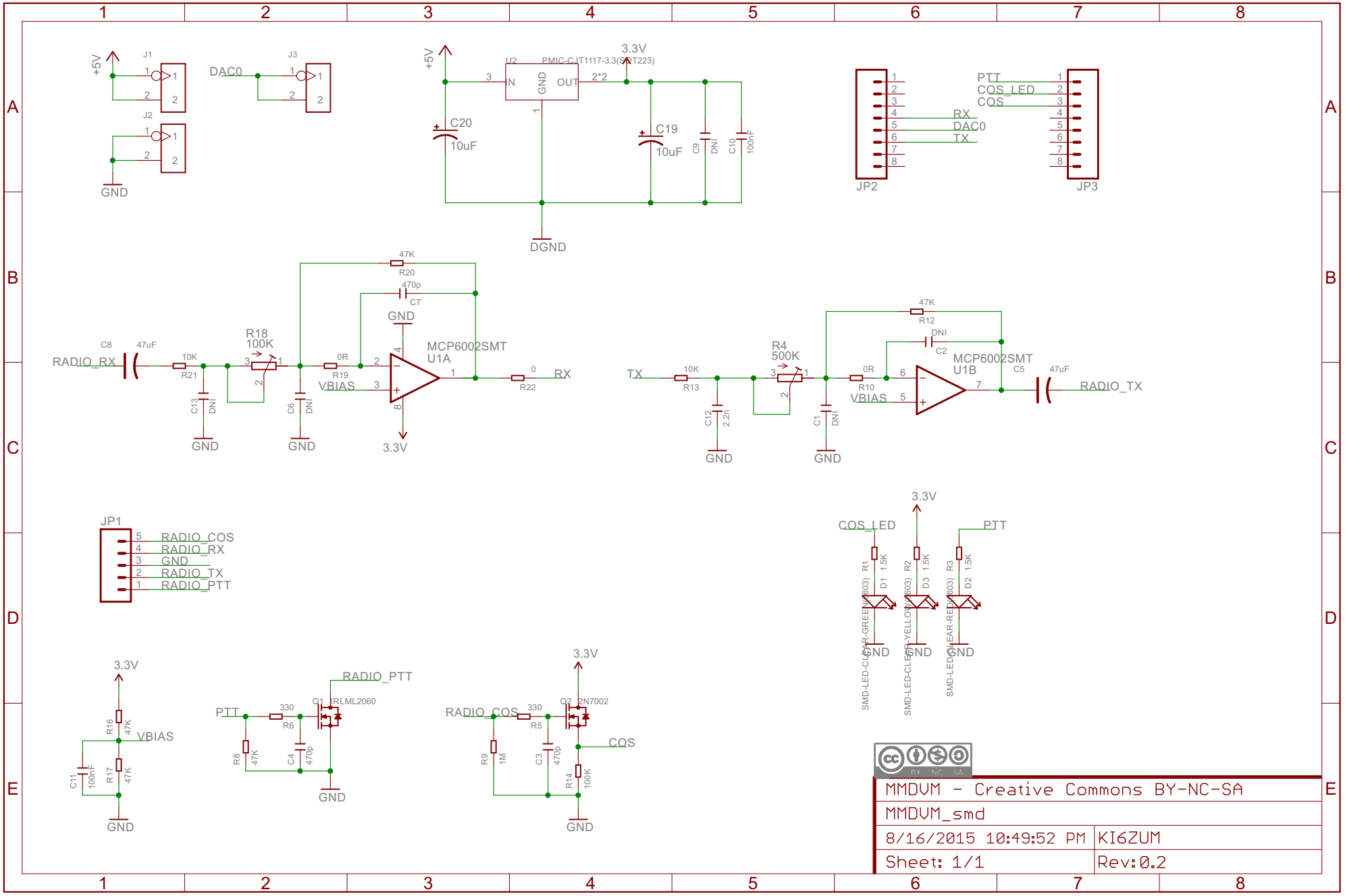
+5V
J1
J2
GND
DAC0
J3
U2
PMIC-CJT1117-3.3(SOT223)
N
GND
OUT
2*2
3.3V
C20
10uF
C19
10uF
C9
DNI
C10
100nF
DGND
JP2
JP3
PTT
COS_LED
COS
RX
DAC0
TX
47K
R20
470p
C7
GND
R18
100K
C8
47uF
RADIO_RX
10K
R21
0R
R19
VBIAS
MCP6002SMT
U1A
RX
R22
C13
DNI
C6
DNI
3.3V
TX
10K
R13
R4
500K
C12
2.2n
C1
DNI
R12
DNI
C2
MCP6002SMT
U1B
R10
C5
47uF
RADIO_TX
JP1
RADIO_COS
RADIO_RX
GND
RADIO_TX
RADIO_PTT
R16
47K
R17
47K
C11
100nF
PTT
330
R6
Q1
IRLML2060
R8
47K
C4
470p
RADIO_COS
330
R5
Q2
2N7002
COS
R9
1M
C3
470p
R14
100K
R1
1.5K
D1
R2
1.5K
D3
R3
1.5K
D2
SMD-LED-CLEAR-GREEN(0603)
SMD-LED-CLEAR-YELLOW(0603)
SMD-LED-CLEAR-RED(0603)
MMDVM - Creative Commons BY-NC-SA
MMDVM_smd
8/16/2015 10:49:52 PM
KI6ZUM
Sheet: 1/1
Rev:0.2